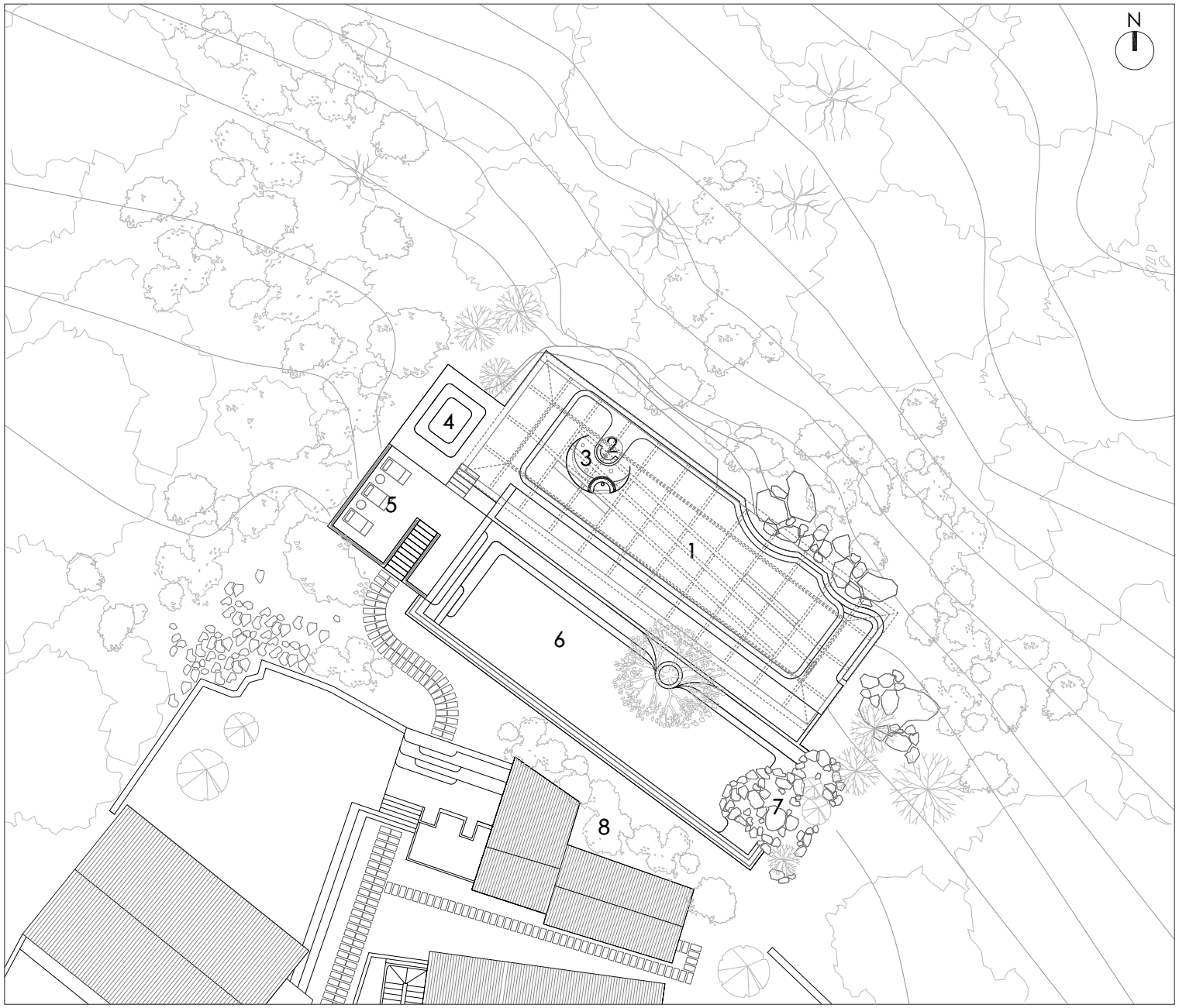

总平面图_Site Plan

0 4 8 16m

1 瑜伽亭	1 Yoga Pavilion
2 淋浴间	2 Shower Room
3 储藏间	3 Storage
4 按摩池	4 Jacuzzi
5 休息区	5 Rest Area
6 泳池	6 Swimming Pool
7 景观石	7 Landscape Stone
8 竹丛	8 Bamboo

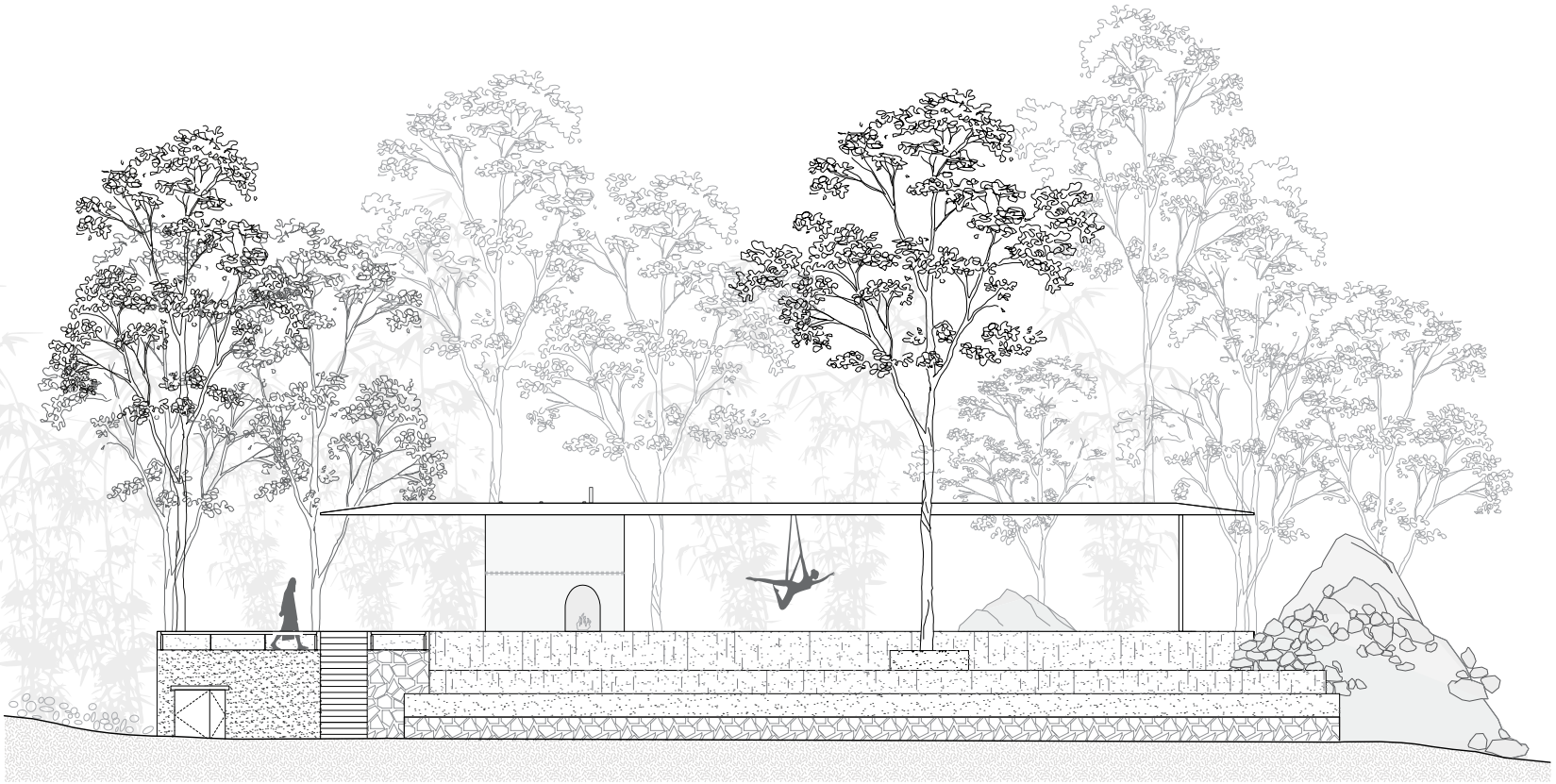

南立面图_South Elevation

0 2 4m

西立面图_West Elevation

0 2 4m

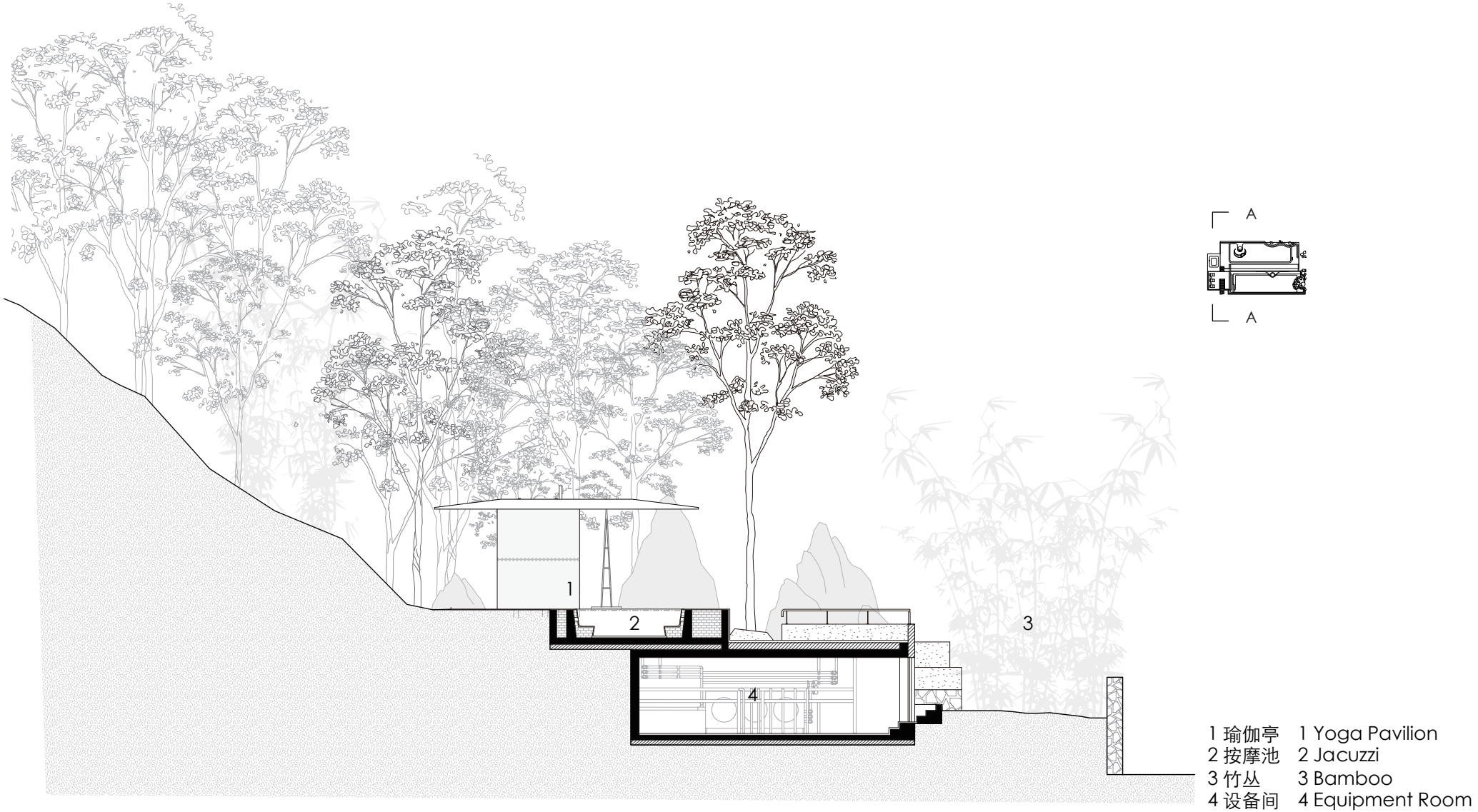

A-A 剖面图_A-A Section

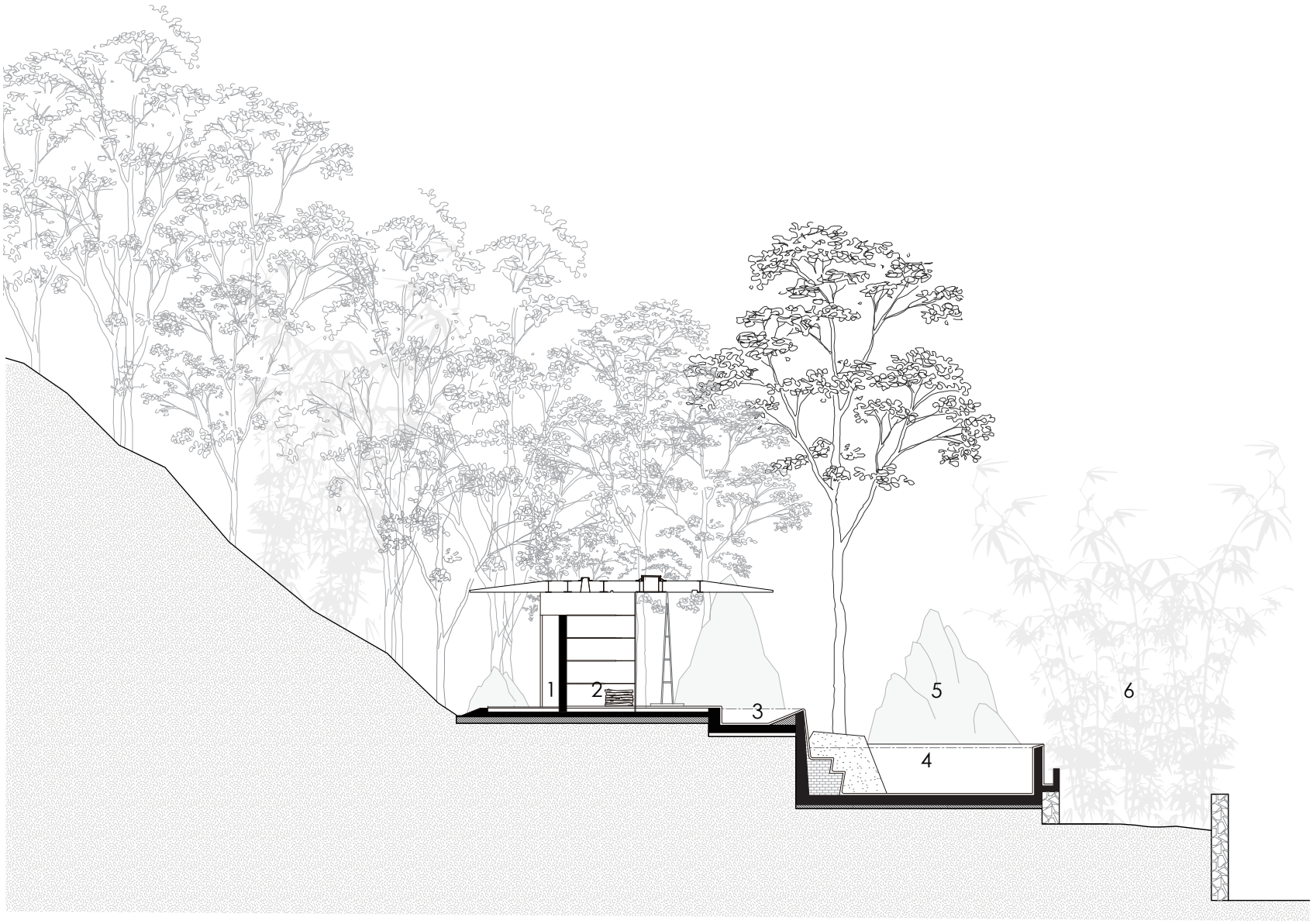

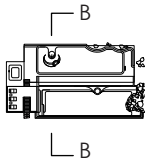

1 淋浴间 1 Shower Room
2 储藏间 2 Storage
3 浅水池 3 Shallow Pool
4 泳池 4 Swimming Pool
5 景观石 5 Landscape Stone
6 竹丛 6 Bamboo

0 2 4m

B-B 剖面图_B-B Section

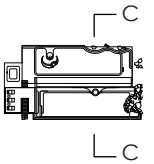

1 瑜伽亭 1 Yoga Pavilion
2 浅水池 2 Shallow Pool
3 泳池 3 Swimming Pool
4 景观石 4 Landscape Stone
5 竹丛 5 Bamboo

0 2 4m

C-C 剖面图_C-C Section

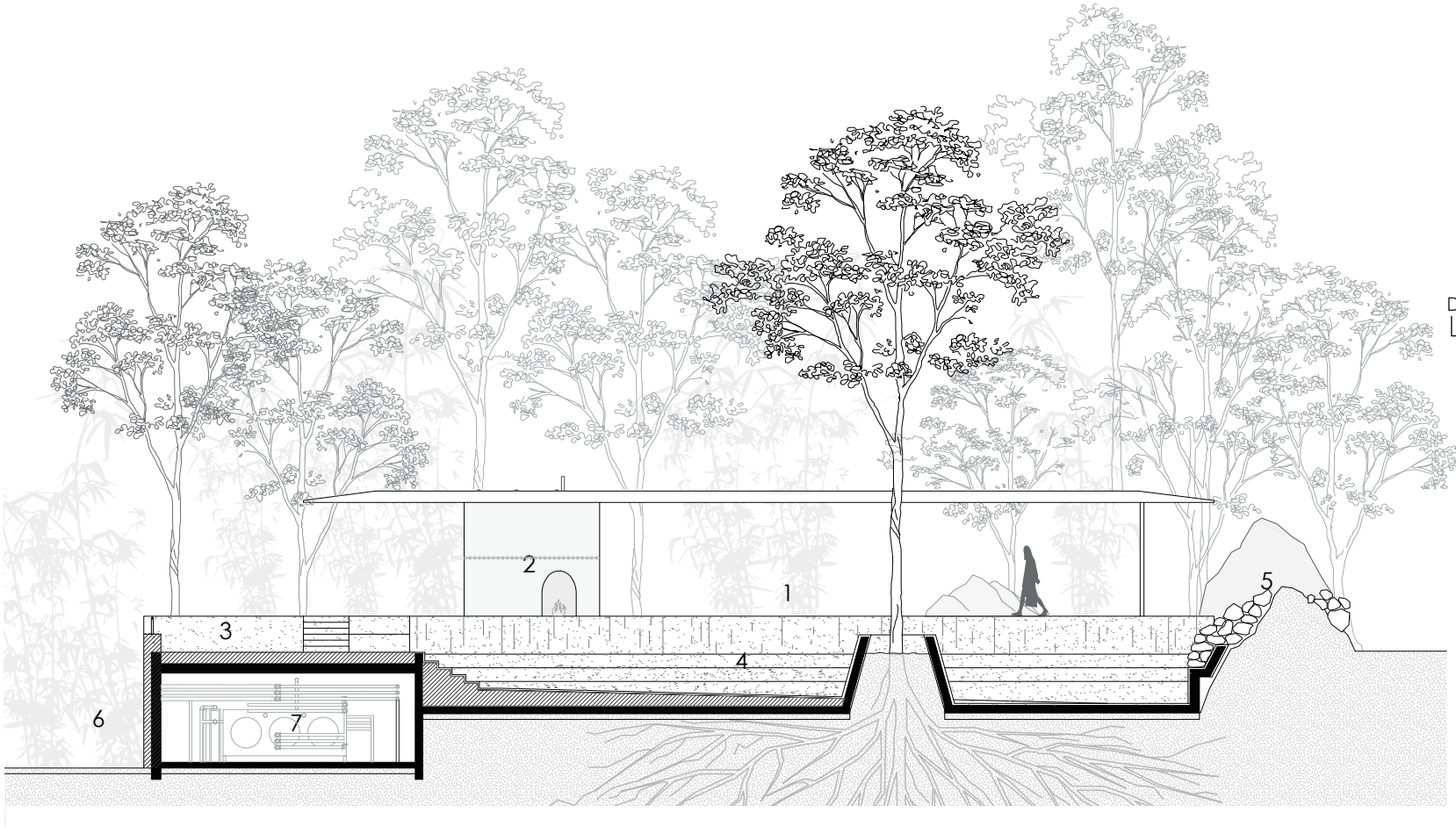

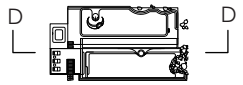

1 瑜伽亭 1 Yoga Pavilion
2 储藏间 2 Storage
3 休息区 3 Rest Area
4 泳池 4 Swimming Pool
5 景观石 5 Landscape Stone
6 竹丛 6 Bamboo
7 设备间 7 Equipment Room

D-D 剖面图_D-D Section

0 2 4m

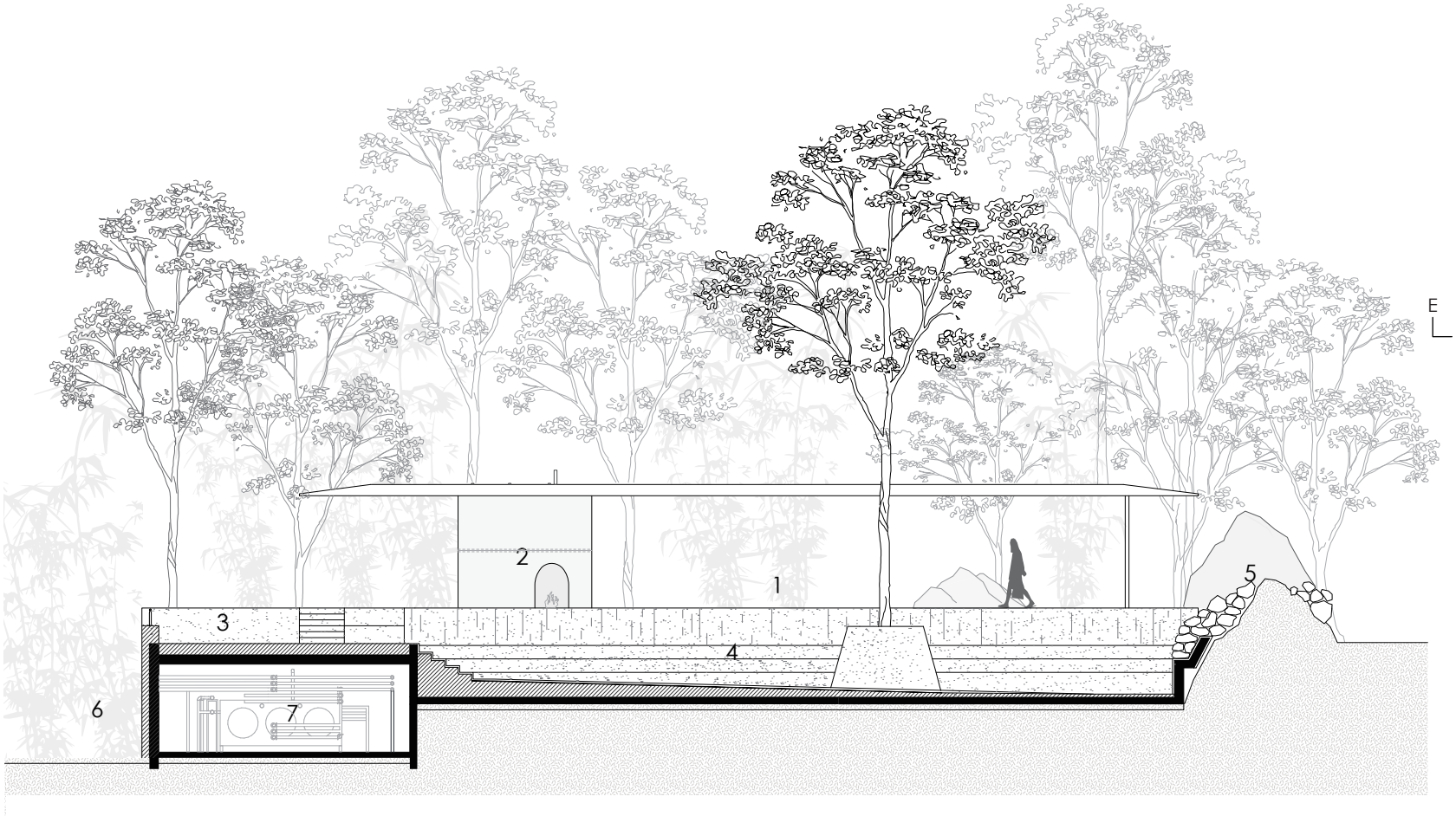

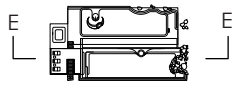

1 瑜伽亭 1 Yoga Pavilion
2 储藏间 2 Storage
3 休息区 3 Rest Area
4 泳池 4 Swimming Pool
5 景观石 5 Landscape Stone
6 竹丛 6 Bamboo
7 设备间 7 Equipment Room

E-E 剖面图_E-E Section

0 2 4m

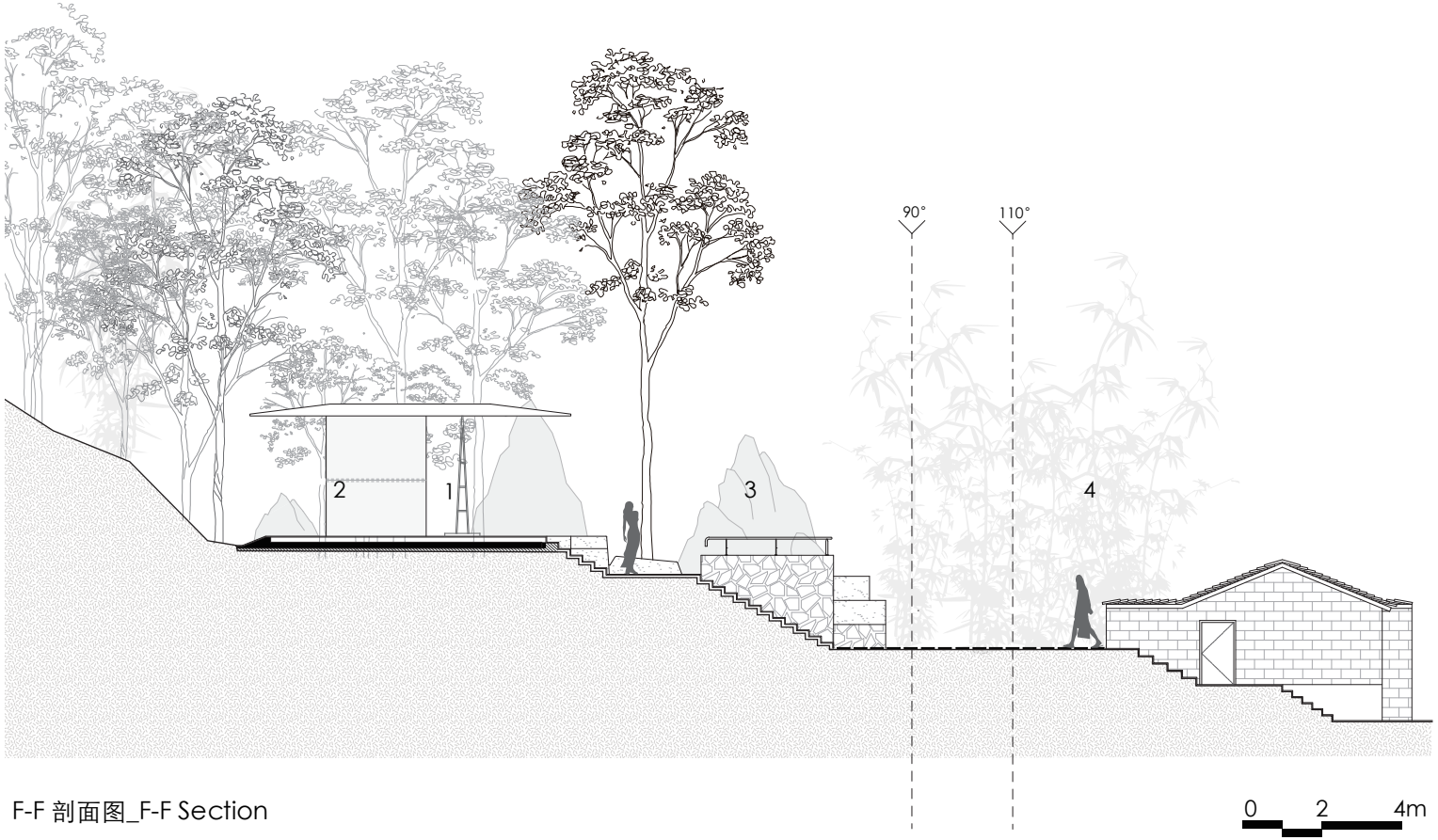

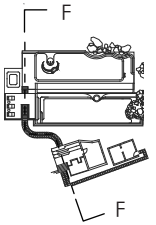

1 瑜伽亭 1 Yoga Pavilion
2 淋浴间 2 Shower Room
3 景观石 3 Landscape Stone
4 竹丛 4 Bamboo

F-F 剖面图_F-F Section

0 2 4m

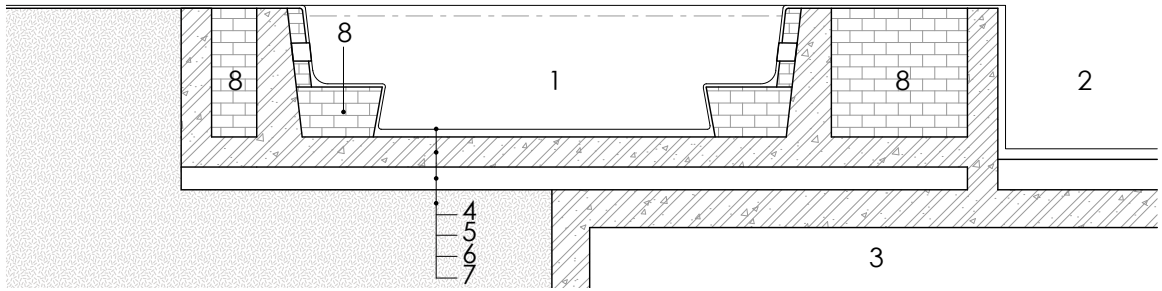

1 按摩池
2 休息区
3 设备间
4 水洗石
5 钢筋混凝土
6 混凝土垫层
7 素土夯实
8 砖砌层

1 Jacuzzi
2 Rest Area
3 Equipment Room
4 Washed Stone
5 Reinforced Concrete
6 Concrete Bedding
7 Rammed Earth
8 Brick Course

按摩池剖面_Jacuzzi Section

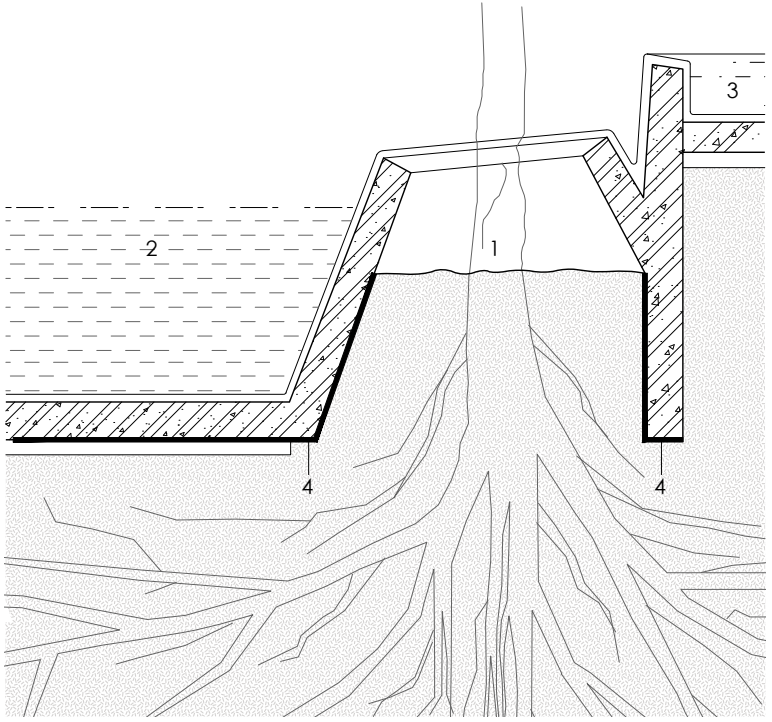

1 树池
2 泳池
3 浅水池
4 耐根穿刺防水层

1 Tree Pool
2 Swimming Pool
3 Shallow Pool
4 Root-Resistant Waterproofing Layer

0 1 2m

树池剖面图_Tree Pool Section

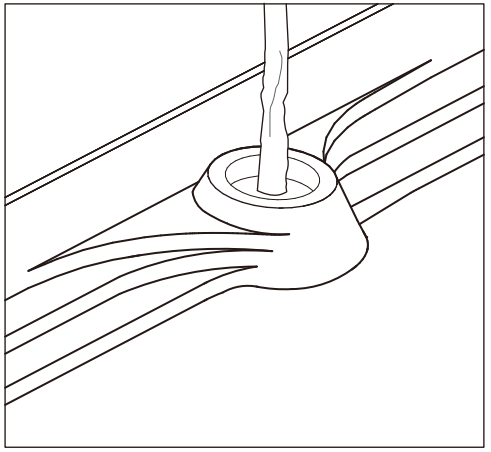

树池轴侧图_Tree Pool Axonometric

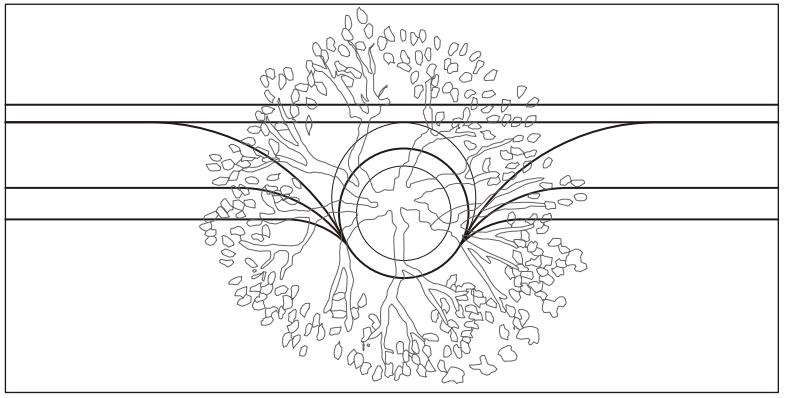

树池平面示意图_Tree Pool Top View

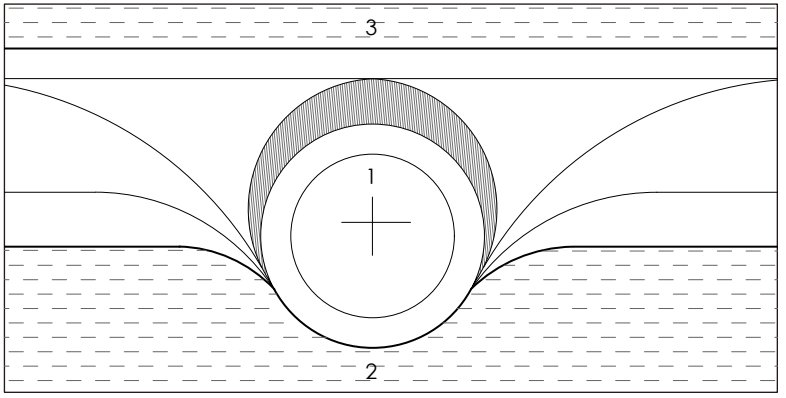

树池平面图_Tree Pool Plan

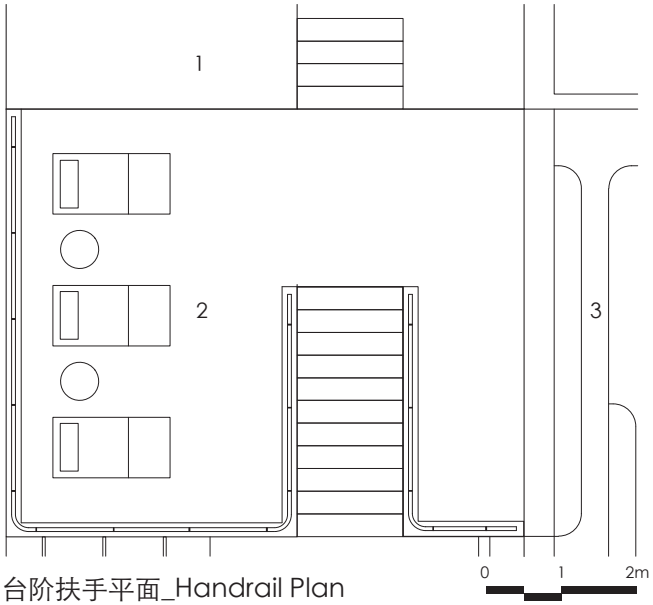

台阶扶手平面_Handrail Plan

1 按摩池　1 Jacuzzi
2 休息区　2 Rest Area
3 泳池　3 Swimming Pool

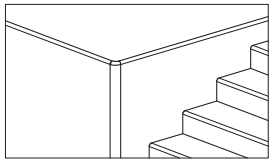

台阶轴侧图_Step Axonometric

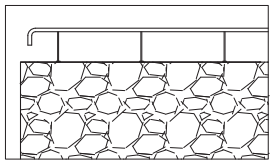

扶手立面图_Handrail Elevation

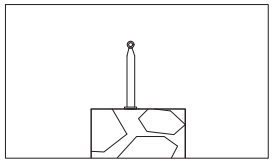

扶手剖面图_Handrail Section

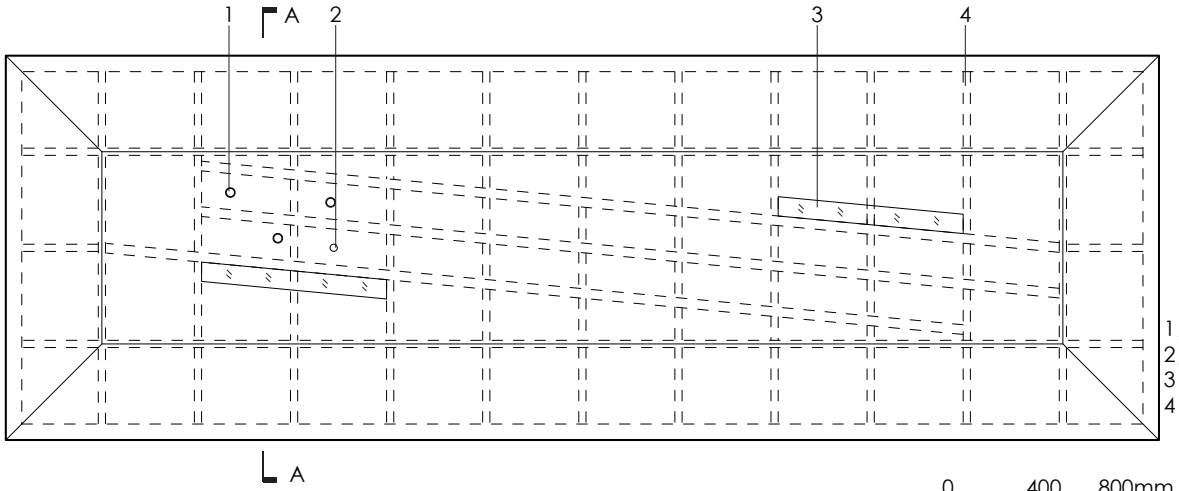

1 采光孔 1 Tapered Skylights
2 烟囱 2 Chimney
3 天窗 3 Linear Skylight
4 H型钢梁 4 H-Shaped Beam

0 400 800mm

屋顶平面图_Roof Plan

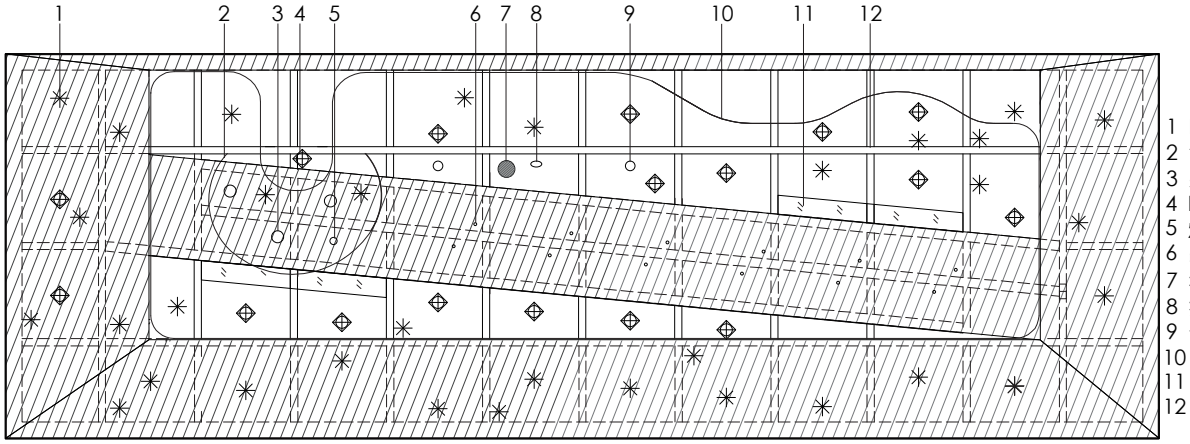

1 L-E天花灯 1 L-E Ceiling Light
2 筒壁 2 Shell
3 采光孔 3 Tapered Skylights
4 L-D天花灯 4 L-D Ceiling Light
5 烟囱留洞 5 Chimney Hole
6 吊环 6 Ring
7 检修口 7 Inspection Hole
8 投影仪 8 Projector
9 音响 9 Soundbox
10 窗帘轨道 10 Cuitain Track
11 天窗 11 Linear Skylight
12 H型钢梁 12 H-Shaped Beam

0 400 800mm

天花平面图_Ceiling Plan

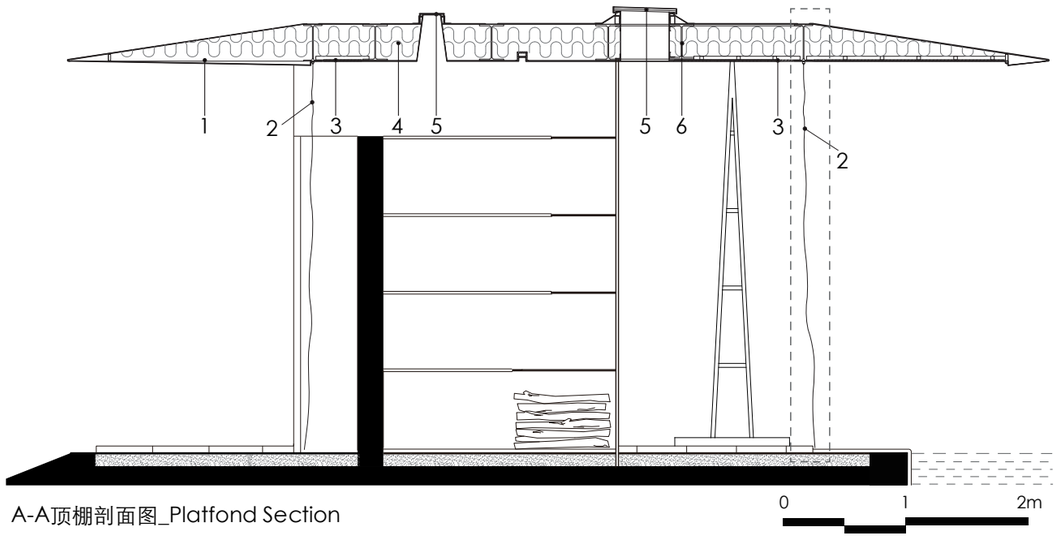

A-A顶棚剖面图_Platfond Section

1 氟碳喷涂钢板	1 Polycarbonate Panel
2 布帘	2 Sunbrella Fabric
3 硅孔砂吸音板	3 Porous Silicon Acoustic Ceiling Panel
4 保温岩棉	4 Thermal Insulation Board
5 夹胶安全玻璃	6 Laminated Glass
6 工字钢梁	7 I-beam

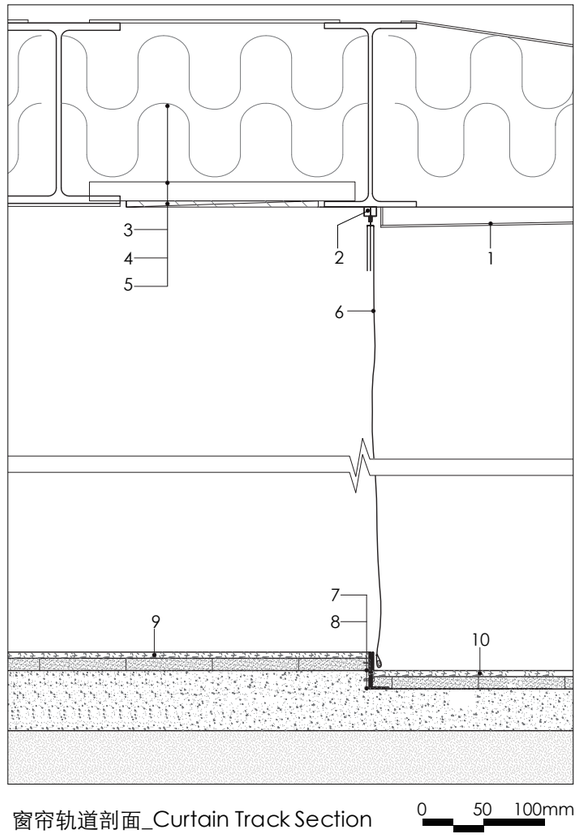

窗帘轨道剖面_Curtain Track Section

1 氟碳喷涂钢板	1 Polycarbonate Panel
2 窗帘轨道	2 Curtain Track
3 保温岩棉	3 Themal Insulation Board
4 龙骨	4 Skeleton
5 硅孔砂吸音板	5 Porous Silicon Acoustic Ceiling Panel
6 布帘	6 Sunbrella Fabric
7 扁钢	7 Flat Steel
8 金属固定件	8 Metal Fixture
9 水洗石面层	9 Washed Stone
10 水磨石面层	10 Terrazzo

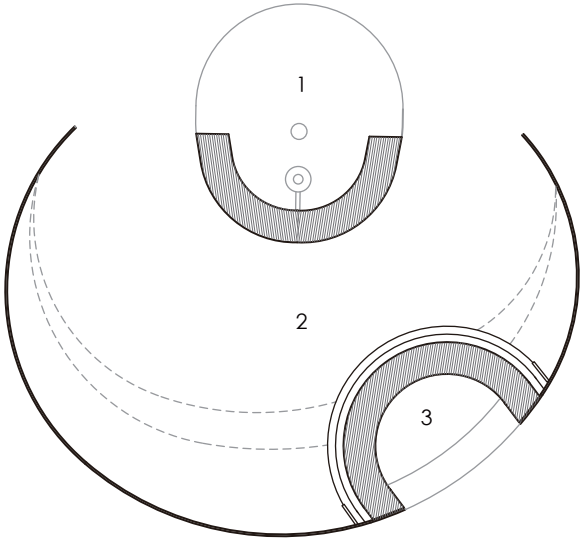

壁炉平面图_Fireplace Plan

1 淋浴间 1 Shower Room
2 储物间 2 Storage
3 壁炉 3 Fireplace

0 1 2m

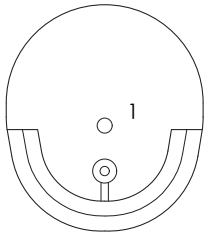

淋浴区定位图_Shower Location Plan

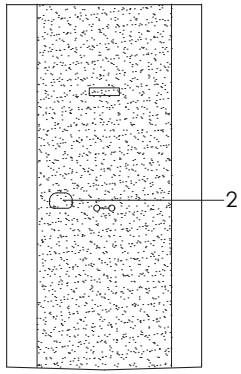

淋浴区立面_Shower Elevation

1 淋浴间 1 Shower Room
2 置物区 2 Storage

0 0.5 1m

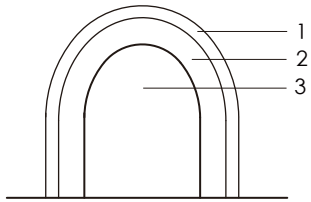

壁炉立面图_Fireplace Elevation

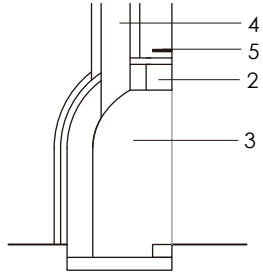

壁炉剖面图_Fireplace Section

1 加固钢板 1 Reinforced Steel Sheet
2 耐火砖 2 Firebrick
3 烧柴区 3 Wood Burning Area
4 烟囱 4 Chimney
5 不锈钢板 5 Stainless Steel Sheet

0 400 800mm

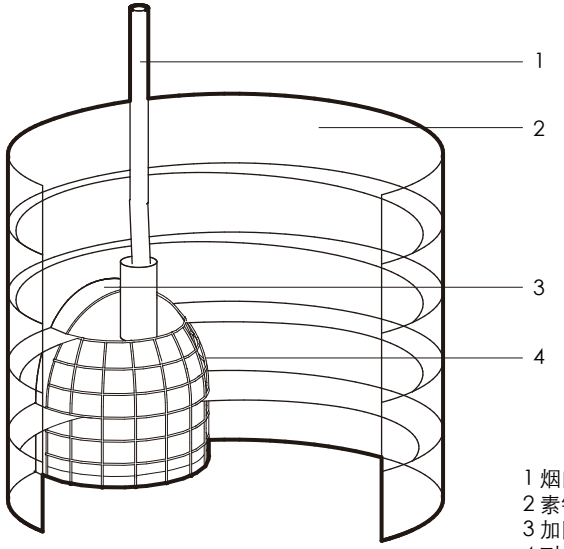

筒壁内侧轴侧图_Shell Axonometric

1 烟囱 1 Chimney
2 素钢板 2 Un-painted Steel
3 加固钢板 3 Reinforced Steel Sheet
4 耐火砖 4 Firebrick

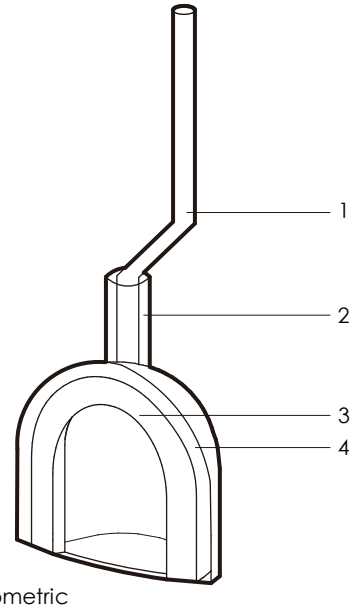

壁炉轴侧图_Fireplace Axonometric

1 烟囱 1 Chimney
2 素钢板 2 Un-painted Steel
3 耐火砖 3 Firebrick
4 加固钢板 4 Reinforced Steel Sheet

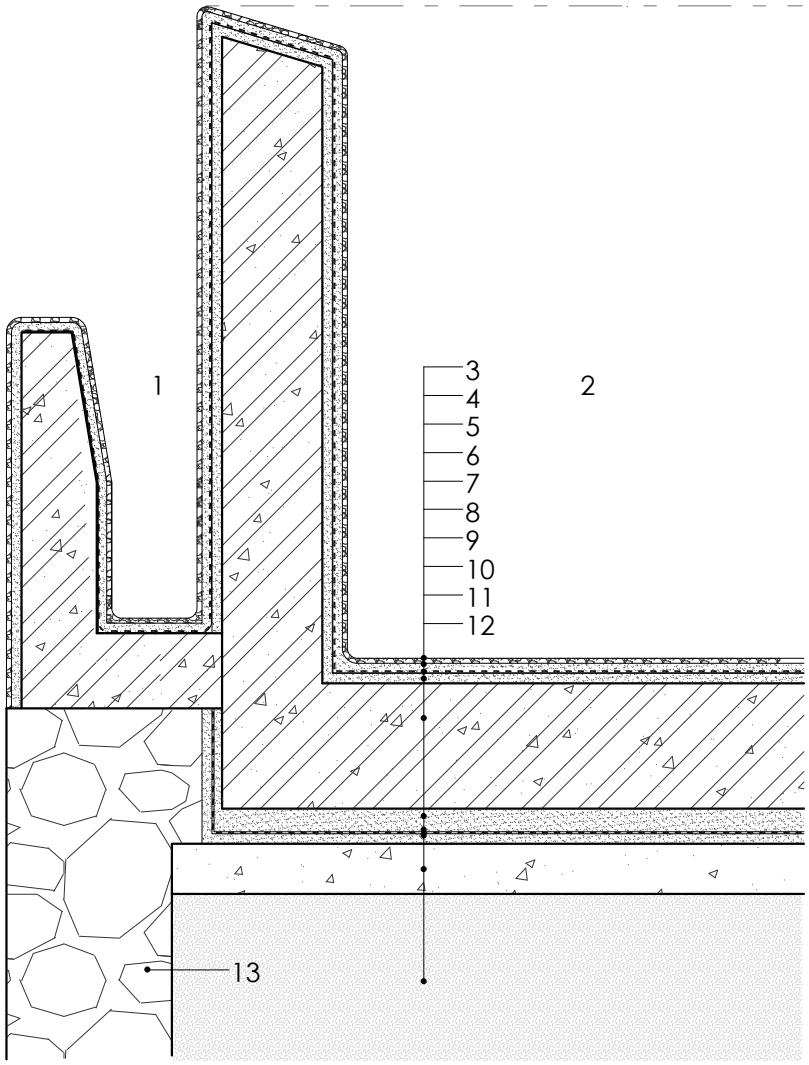

排水沟剖面_Gutter Section

0 200 400mm

1 排水沟	1 Gutter
2 泳池	2 Swimming Pool
3 水洗石面层	3 Washed Stone
4 水泥砂浆结合层	4 Cement Mortar Bonding Layer
5 防水涂层	5 Waterproof Coating
6 水泥砂浆找平层	6 Cement Mortar Screeding Layer
7 钢筋混凝土池结构	7 Reinforced Concrete Pool Structure
8 细石混凝土	8 Fine Stone Concrete
9 水泥砂浆	9 Cement Mortar
10 沥青防水卷层	10 Impervious Asphalt Concrete Layer
11 混凝土垫层	11 Concrete Bedding
12 素土夯实	13 Rammed Earth
13 毛石砌筑	12 Rubble Masonry